THIS DRAWING AND THE DESIGNS REPRESENTED ARE THE CONFIDENTIAL PROPERTY OF A & E INCORPORATED EXPRESSED CONSENT IS REQUIRED FROM A & E INCORPORATED TO REPRODUCE, COPY OR MANUFACTURE IN WHOLE OR PART BY ANY METHOD.

-

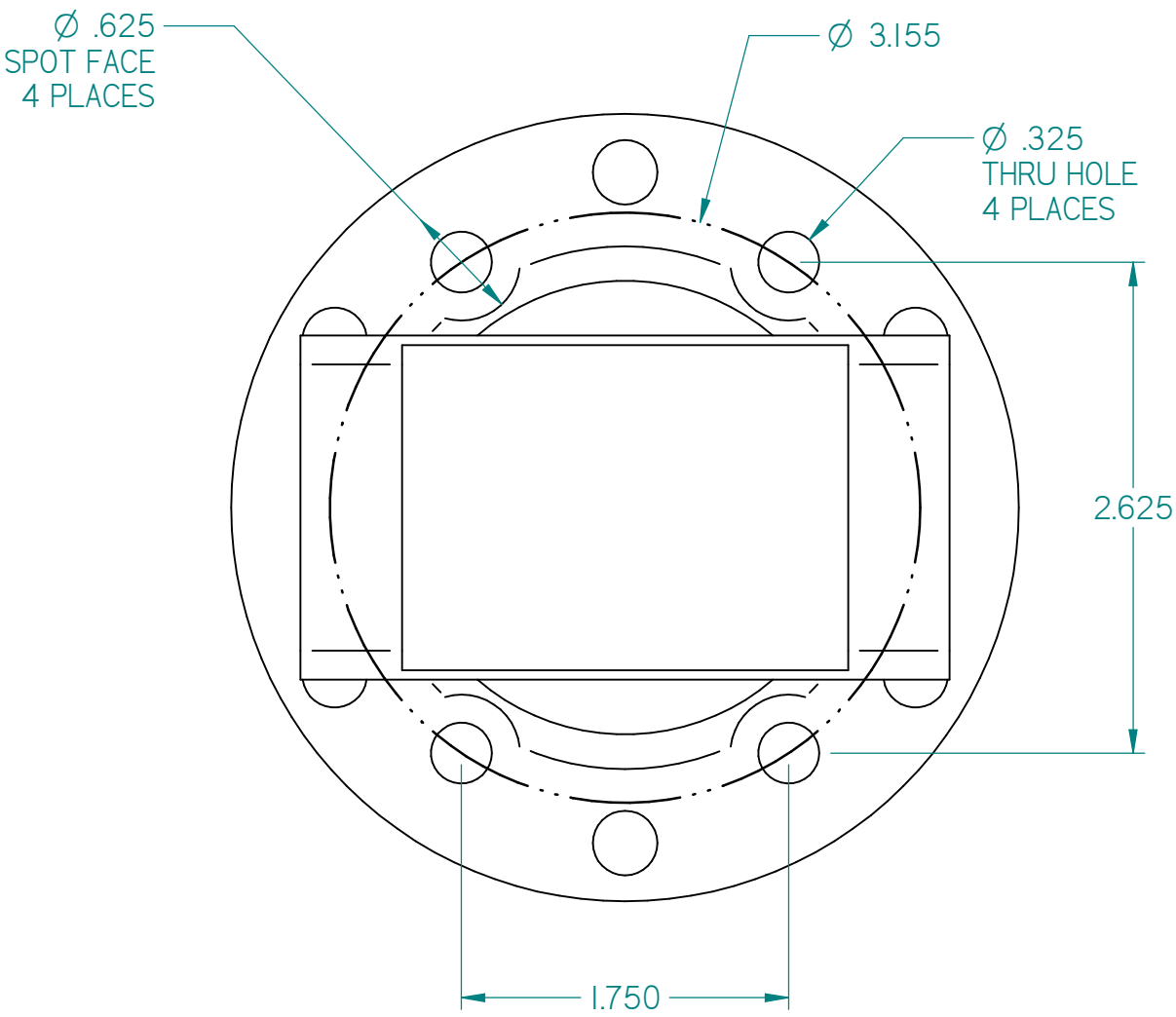

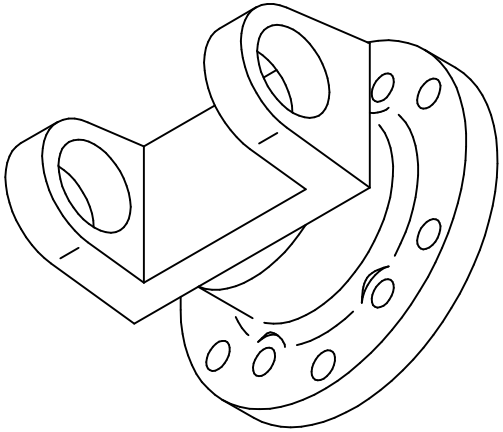

K				MATERIAL	[redacted]			
J								
H								
G				HEAT TREAT	PART NAME			
F					ROCKFORD FLANGE YOKE R2-2-3102 WITH MODIFICATIONS			
E				FINISH	DRAWN BY	DATE	CHECKED BY	SCALE
D					JLL	4/2/13	- - -	NTS
C				.X - ±.030"	FRACTIONAL- ±.060		PART NUMBER	
B				.XX - ±.015" .XXX - ±.005"	ANGULAR- ± 2°		R2-2-3102	
A		JLL		.XXXX - ±.0005"				

W.O.

SHEET OF

FORM Q10143 REV. D